30 inch Induction Range, 4 Heating Zones, Electric Oven

Professional Series

PRO304INMXV

The new Bertazzoni ranges are superb cooking appliances designed, engineered and made in Italy. All Bertazzoni appliances integrate seamlessly into style-harmonized suites for a true, high-performing kitchen.

This all-new induction range has 4 high-power heating zones with maximum power output of 3700W. The right-side heating zones can be bridged to create a larger cooking area. Each induction area is controlled with knobs and has a convenient read-out interface on the glass worktop.

The 4.7 cubic feet oven cavity is the largest in its class, with dual convection fan for balanced airflow and even temperature baking and roasting on 7 shelf levels. The elegant large temperature gauge monitors the actual temperature in the oven. The extra wide electric broiler with optional convection is ideal for grilling and searing at high heat.

The soft-motion oven door with edge-to-edge tempered glass is a masterpiece of European engineering and makes the oven door very easy to wipe clean. The stainless steel racks included with the range can be equipped with optional telescopic glides.

All Bertazzoni appliances are covered by a 2-year warranty.

Guarda online

Specifications

Features

Worktop	
Size	30 in
Cooking zones	4
Number of induction zones	4
Worktop type	induction
Worktop design	stainless steel squared
Worktop controls	knobs
Knobs	metal coated
Backguard	yes

Cooking zones	
Induction 2 bridge zones	yes
Induction front left	⌀ 5 ¾ in - 1400 W (2200 W booster)
Induction back left	⌀ 8 ¼ in - 2300 W (3700 W booster)
Induction front right	Bridge 2100 W (3700 W booster)
Induction back right	Bridge 2100 W (3700 W booster)

Oven cavity	
Oven configuration	single
Oven fuel	electric
Oven type	electric multifunction
Oven broiler type	electric
Cooking modes	bake / bottom bake / broil / convection / convection bake / convection broil / fast preheat / pizza / upper bake
Oven volume	4.7 ft^3
Oven convection system	dual horizontal fans
Inner oven door	triple
Removable inner glass	yes
Oven levels	7
Door hinges	soft motion
Wire-shelves	2 standard with handle

Tray	1 baking tray with grill trivet
Grill trivet for tray	yes
Oven lights	double lateral
Bottom	
Legs	stainless steel
Technical specifications	
Absorbed current (A)	40 A with dedicated circuit
Electrical supply	120/240V 60 Hz - 11 000W 120/208V 60 Hz - 10 300W
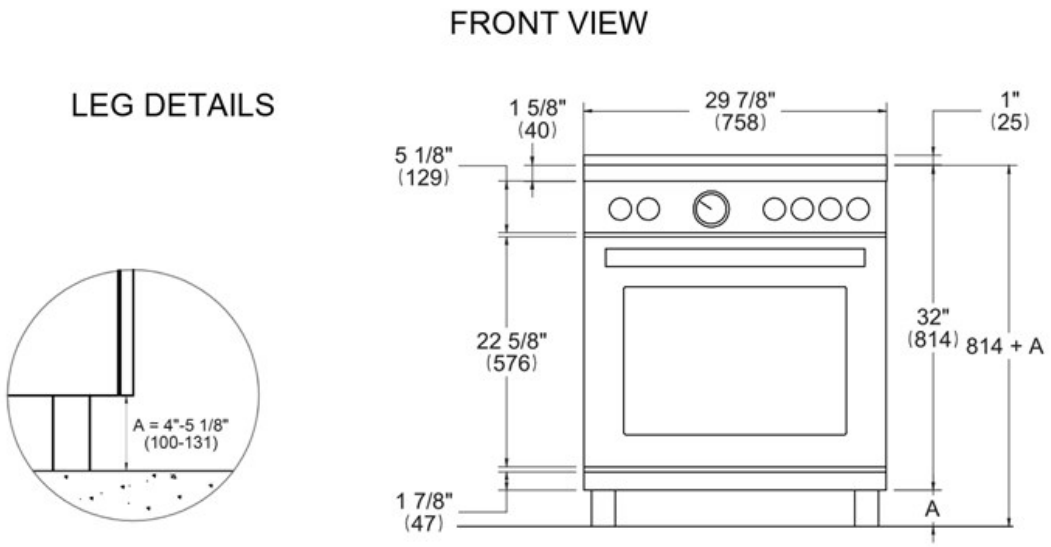
Dimensions