24 Wallmount & Undermount Canopy Hood, 1 motor CFM 600

Master Series

KU24PRO1X/14

All Bertazzoni hoods are designed, engineered and made in Italy using the highest grade materials and components. Every hood pairs perfectly with all Bertazzoni ranges, rangetops and cooktops of the same size and integrates seamlessly with all other Bertazzoni appliances into style-harmonized suites for a true, high-performing kitchen.

Powered by a 600 CFM motor with three power settings, this stainless steel canopy hood comes with aluminum mesh filters or optional baffle filters, all easily removable and dishwasher safe. It can be installed under a cabinet, or on the wall using a choice of duct cover accessories provided in multiple widths and heights to fit most ceiling heights. It can be vented out or recirculated.

All Bertazzoni appliances are covered by a 2-year warranty. Products and packaging are 99% recyclable.

Guarda online

Specifications

Features

Hood	
Size	24 in
Hood type	wallmount
Hood control	electronic with buttons
Duct cover	not included
Motor	1
Speed	3
Filters type	aluminum mesh
Lights	2 LED
Hood finishing	stainless steel
Sound rating	1.2 - 4.9 Sones
Max extraction power	600.00 CFM

Technical specifications	
Electrical supply	120 V - 60 Hz - 3.30 A
Power rating	400 W

Dimensions

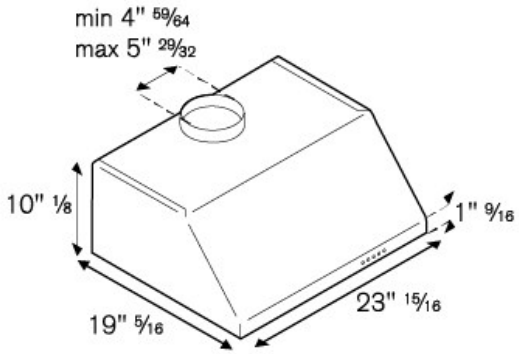
min 4" 59/64
max 5" 29/32
10" 1/8
1" 9/16
19" 5/16
23" 15/16

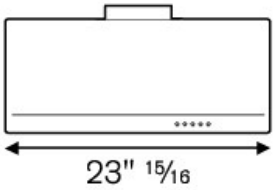
23" 15/16

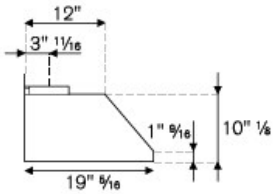
12"
3" 11/16
1" 9/16
10" 1/8
19" 5/16