24" Built-in Refrigerator Column Panel Ready

Master Series

REF24RCPRR/23

These premium built-in column refrigerators are masterpieces of Bertazzoni design and technology. Their stylish panel ready front doors reflect close attention to detail and high-quality materials, inside and out. Aluminium and glass surfaces make it easier to maintain hygiene throughout.

The side-mounted evaporator design offers category-leading depth and storage capacity. Top and lateral LED lighting gives you perfect all-round visibility.

Easy to use, the touch-control user interface offers precision temperature control to extend food preservation. A variable speed compressor ensures accurate temperature control and energy efficiency. Efficiency is key: lateral airflow creates a cold air curtain to maintain a consistent temperature even when door is opened frequently. Rapid cooling to optimize the temperature when large amounts of food are loaded.

Proprietary lift & swing hinges allow for flush installation with minimal clearance from surrounding cabinet panels. This allows for elegant configurations of refrigerator, freezer and wine cellar in any desired width. All three columns work in harmony with handles and finishes available for every Series.

To mount a Bertazzoni handle kit on a custom kitchen cabinet panel, use brass threaded inserts available for purchase **here**.

Using one of the 3 available handle kits in Professional, Master and Heritage Series style, this refrigerator integrates seamlessly with all other Bertazzoni appliances into style-harmonized suites for a true, high-performing kitchen.

Handle kits are sold separately.

Bertazzoni column refrigerators are designed with pride in Italy and covered by an industry-leading 2-year parts and labor warranty.

See predecessor model **here**.

Guarda online

Specifications

Features

General features	
Size	24 in
Cooling system	frost free
User interface	TFT Touch & Scroll interface
Display functions	Door adjar alarm, Shopping Mode, Vacation Mode, Sabbath Mode
Lighting	LED surround illumination
Door ajar alarm	yes
Door finishing	panel ready
Cabinet finishing	white metal
Refrigerator net capacity	13 cu.ft³
Refrigerator shelves	4 height-adjustable
Refrigerator drawers	3 soft-close metal drawers
Door storage	3 bins
Sound rating	41 dbA
Certification	CETLUS
DOE compliant	yes

Technical specifications	
Electrical supply	115 V - 60 Hz - 1.5 A
Power rating	163 W
Power connection	NEMA 5-15P with 79" power cord
Energy consumption	296.0 kWh/yr

Dimensions

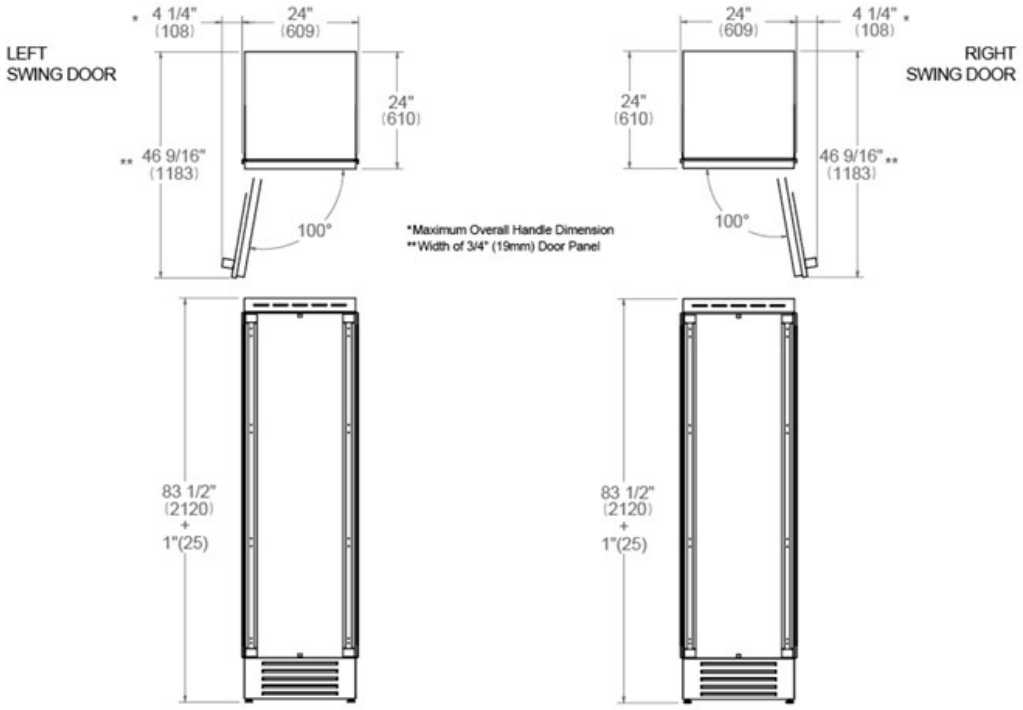
LEFT
SWING DOOR
* 4 1/4"
(108)
24"
(609)
24"
(610)
** 46 9/16"
(1183)
100°
83 1/2"
(2120)
+
1"(25)
*Maximum Overall Handle Dimension
**Width of 3/4" (19mm) Door Panel
24"
(609)
4 1/4" *
(108)
RIGHT
SWING DOOR
24"
(610)
46 9/16" **
(1183)
100°
83 1/2"
(2120)
+
1"(25)