18 Panel Ready Dishwasher 8 settings 49dB

Master Series

DW18PR

All Bertazzoni dishwashers are designed and engineered with the highest grade materials and components. This dishwasher accommodates standard kitchen panels over the door and is Energy Star compliant using as little as 3.5 gallons for a complete wash cycle.

The panel ready dishwasher offers superb cleaning performance with 3 spray arms to remove tough deposits. Load up to 8 place settings in the upper and lower baskets. Select one of the 6 available wash cycles and 4 wash options through the concealed LED interface. This top-of-the-line dishwasher is perfectly insulated and virtually inaudible at 49 DbA.

To mount a Bertazzoni handle kit on a custom kitchen cabinet panel; use brass threaded inserts available for purchase **here**

All Bertazzoni appliances are covered by a 2-year warranty. Products and packaging are 99% recyclable.

Guarda online

Specifications

Features

General features	
Size	18 In
Place setting	8
User interface	LED touch
Spray arms	3
Number of racks	2
Wash cycle	6 - Heavy, Glass,Normal, Quick, Eco, Rinse
Wash Options	4 - Sanitize, Hi temp, Heating dry, Energy save
Filter system	triple filter system
Certification	UL, CUL

Technical specifications	
Power rating	975 W
Electrical supply	120 V - 60 Hz - 6.67 A
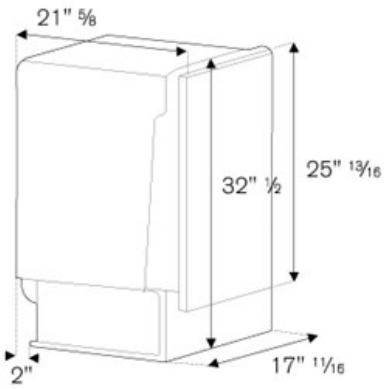
Dimensions