30 Double Electric Convection Oven Self-Clean with Assistant

Master Series

MAST30FDEXT

Bertazzoni built-in ovens put Italian design and precision at the heart of your kitchen. As beautiful as they are practical, they can be installed flush or proud in any style of kitchen cabinet.

With technology designed to help you cook any dish to perfection, the Bertazzoni dual diagonal convection fans offer best-in-class even heat distribution throughout the extra-large 4.1 cu.ft oven cavity. Evenly bake large batches of cookies using all 7 shelf positions. The full-width 8-pass broiler sears steaks so they are crisp on the outside and juicy inside. Or use it to broil delicate fish fillets to perfection.

Cook the perfect roast with confidence with the Bertazzoni Assistant and food temperature probe. Smart technology manages cooking modes, temperature and time for you. Smooth-glide oven racks and self-close doors make moving hot dishes safe and simple. And when you've finished cooking, the no-fingerprint stainless steel is easy to clean.

Bertazzoni built-in ovens are designed with pride in Italy and covered by an industry-leading 2-year parts and labor warranty.

Guarda online

Specifications

Features

Oven cavity	
Size	30 in
Oven configuration	double
Oven fuel	electric
Oven broiler type	electric
Cooking modes	bake / Bertazzoni Assistant / broil / convection / convection bake / convection broil / defrosting / dehydrate / energy saving mode / fast preheat / oven light / pizza / proofing / pyrolytic self clean / sabbath mode / turbo / warming
Oven convection system	dual diagonal with heating element
First oven volume	4.10 ft³
Secondary oven net volume	4.10 ft³
Oven controls	knobs / touch TFT display
Inner oven door	quadruple
Removable inner glass	yes
Cavity finishing	pyrolityc grey enamel
Oven handle	metal
Cooling fan	yes
Oven levels	7
Timer	touch digital programmer
Auto cooking modes	33 preset / with Bertazzoni Assistant
Food probe	yes
Door hinges	soft-close
Sliding shelves	2 sets of telescopic glides
Wire-shelves	2 flat / 2 shaped
Tray	1 baking tray with roasting trivet
Oven lights	double

Technical specifications	
Electrical supply	120/240 V 60 Hz - 11 000 W / 120/208 V 60 Hz - 8800 W / 50 Amp dedicated circuit
Power rating	Bake: 5400W / Broiler: 3400 W / Convection: 3300 W

Power connection	metal conduit 59" power cord
Certification	CSA
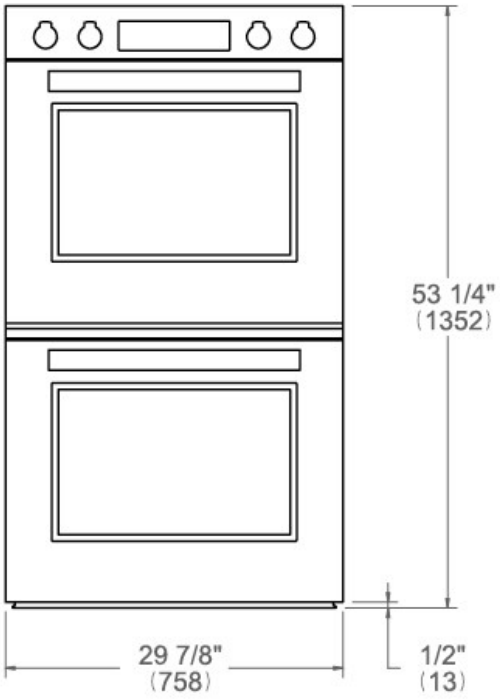
Dimensions