# Medium Duct Cover

## Accessories

**901263**

Medium Duct Cover for:

30" and 36" KU PRO model hoods, 1 motor

All sizes of KU PRO/14 model hoods, 1 motor

All sizes of KU PRO/14 model hoods, 2 motor

Guarda online

# Specifications

## Features

| | |
|---|---|
| Family | duct covers |
| Product | hoods |
| Features | stainless steel design |
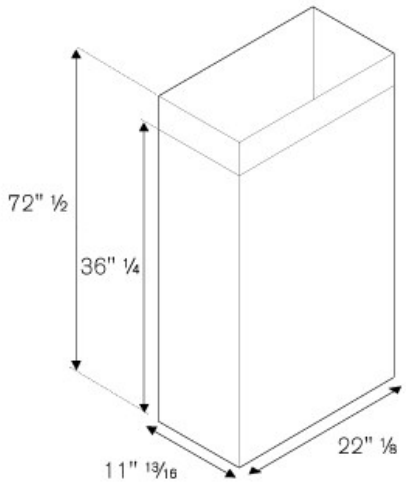
## Dimensions